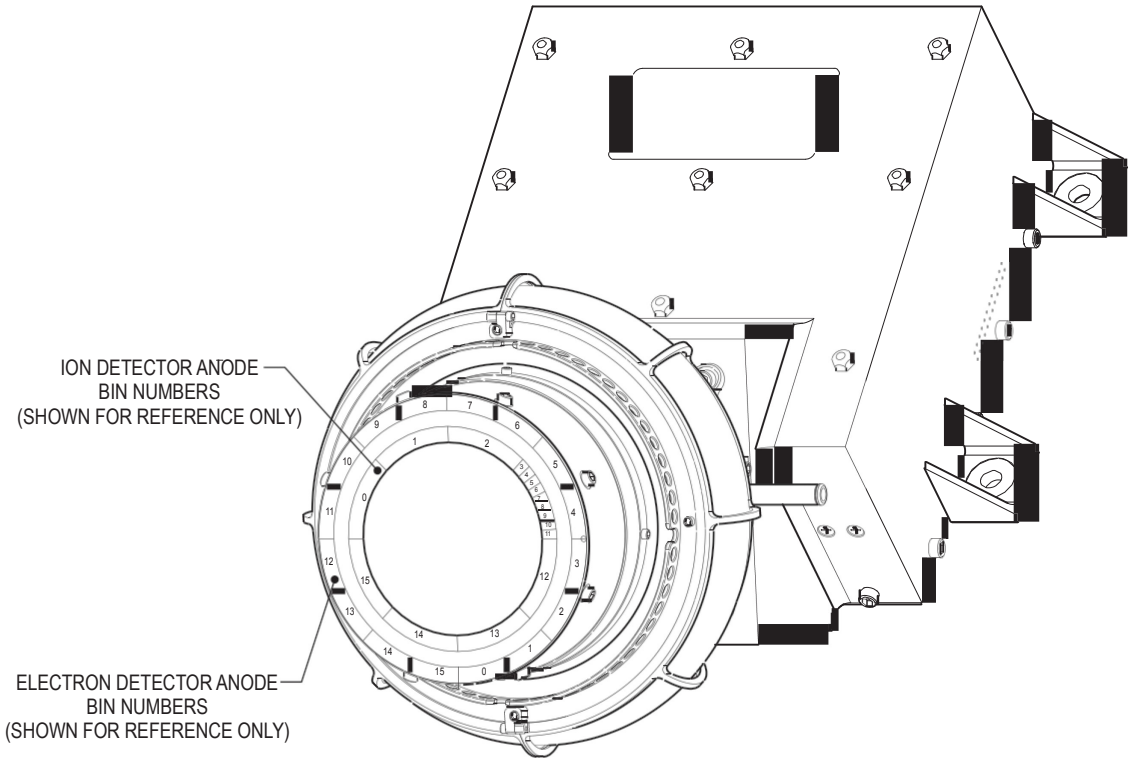
ION DETECTOR ANODE
BIN NUMBERS
(SHOWN FOR REFERENCE ONLY)
ELECTRON DETECTOR ANODE
BIN NUMBERS
(SHOWN FOR REFERENCE ONLY)